ELITE SCREENS

Manual Series Dimensions Table

Unit: Inch														Packaging Dimensions				
Model Number	Nominal Diagonal (Aspect Ratio)	Case Length (A)	View Width (A1)	Screen Width (A2)	Weight Bar Length (A3)	Overall Height (B)	View Height (B1)	Top Black Masking (B2)	B3	B4	End Cap Height (B5)	End Cap Width (C)	C1	N.W (KGS)	G.W (KGS)	L	W	H
M71UWS1	71"(1:1)	56.4	50.2	53.2	56.2	60.4	50.2	4.5	57.1	2.4	3.2	2.7	0.8	10.1	12.6	59.1	4.7	4.3
M71XWS1	71"(1:1)	56.4	50.2	53.2	56.2	60.4	50.2	4.5	57.1	2.4	3.2	2.7	0.8	10.1	12.6	59.1	4.7	4.3
M85UWS1	85"(1:1)	66.4	60.1	63.1	66.2	70.3	60.1	4.5	67.0	2.4	3.2	2.7	0.8	12.6	14.8	68.9	4.7	4.3
M85XWS1	85"(1:1)	66.4	60.1	63.1	66.2	70.3	60.1	4.5	67.0	2.4	3.2	2.7	0.8	12.6	14.8	68.9	4.7	4.3
M99UWS1	99"(1:1)	76.3	70.0	73.0	76.1	79.1	70.0	3.0	75.4	2.4	3.6	3.1	0.8	16.8	19.2	80.3	4.7	4.3
M99NWS1	99"(1:1)	76.3	70.0	73.0	76.1	79.1	70.0	3.0	75.4	2.4	3.6	3.1	0.8	16.8	19.2	80.3	4.7	4.3
M113UWS1	113"(1:1)	86.3	79.9	82.9	86.1	90.5	79.9	4.5	86.9	2.4	3.6	3.1	0.8	19.4	23.1	90.6	5.9	5.5
M113NWS1	113"(1:1)	86.3	79.9	82.9	86.1	90.5	79.9	4.5	86.9	2.4	3.6	3.1	0.8	19.4	23.1	90.6	5.9	5.5
M119UWS1	119" (1:1)	90.3	84.1	87.1	90.2	94.2	84.1	4.0	90.6	2.4	3.6	3.1	0.8	20.9	24.5	94.5	5.9	5.5
M119XWS1	119" (1:1)	90.3	84.1	87.1	90.2	94.2	84.1	4.0	90.6	2.4	3.6	3.1	0.8	20.9	24.5	94.5	5.9	5.5
M136UWS1	136"(1:1)	102.3	96.2	99.2	102.1	106.7	96.2	4.5	103.1	2.4	3.6	3.1	0.8	23.8	28.4	106.3	5.9	5.5
M136XWS1	136"(1:1)	102.3	96.2	99.2	102.1	106.7	96.2	4.5	103.1	2.4	3.6	3.1	0.8	23.8	28.4	106.3	5.9	5.5
M170XWS1	170"(1:1)	126.5	120.2	123.2	126.3	131.3	120.2	4.5	127.1	2.4	4.1	3.5	0.8	35.7	42.3	130.7	6.7	6.3
M80NWV	80"(4:3)	70.3	64.0	67.0	70.2	57.8	48.0	4.5	54.5	2.0	3.2	2.7	0.8	12.6	15	73.2	4.7	4.7
M84NWV	84"(4:3)	73.5	67.2	70.2	73.3	58.7	50.4	3.0	55.4	2.0	3.2	2.7	0.8	12.8	15.9	76.4	4.7	4.7
M100NWV1	100"(4:3)	85.3	80.0	82.2	85.1	70.2	60.0	4.5	66.9	2.4	3.2	2.7	0.8	16.5	19	88.2	5.1	4.7
M100UWV1	100"(4:3)	85.3	80.0	82.2	85.1	70.2	60.0	4.5	66.9	2.4	3.2	2.7	0.8	16.5	19	88.2	5.1	4.7
M120XWV2	120"(4:3)	102.3	96.0	99.0	102.1	82.6	72.0	4.5	78.9	2.4	3.6	3.1	0.8	22	26.5	106.3	5.5	5.5
M120UWV2	120"(4:3)	102.3	96.0	99.0	102.1	82.6	72.0	4.5	78.9	2.4	3.6	3.1	0.8	22	26.5	106.3	5.5	5.5
M135XWV2	135"(4:3)	114.4	108.0	111.0	114.3	92.0	81.0	4.5	87.9	2.4	4.1	3.5	0.8	32	36.6	118.5	6.3	5.9
M135UWV2	135"(4:3)	114.4	108.0	111.0	114.3	92.0	81.0	4.5	87.9	2.4	4.1	3.5	0.8	32	36.6	118.5	6.3	5.9
M150XWV2	150"(4:3)	126.5	120.0	123.0	126.3	101.1	90.0	4.5	96.9	2.4	4.1	3.5	0.8	35.3	41.9	130.7	6.3	5.9
M150UWV2	150"(4:3)	126.5	120.0	123.0	126.3	101.1	90.0	4.5	96.9	2.4	4.1	3.5	0.8	35.3	41.9	130.7	6.3	5.9
M80UWH	80"(16:9)	76.0	69.7	72.7	75.9	49.4	39.2	4.5	46.1	2.4	3.2	2.7	0.8	Information Currently Being Updated				
M84UWH	84"(16:9)	79.3	73.2	76.2	79.1	51.3	41.2	4.5	48.1	2.4	3.2	2.7	0.8	13.9	16.5	82	4.5	4.8
M84UWH-E30	84"(16:9)	79.3	73.2	76.2	79.1	76.9	41.2	30.0	73.6	2.4	3.2	2.7	0.8	15.3	18	82.3	5.1	4.7
M84XWH-E30	84"(16:9)	79.3	73.2	76.2	79.1	76.9	41.2	30.0	73.6	2.4	3.2	2.7	0.8	15.4	17.6	88.2	5.1	4.7
M92UWH	92"(16:9)	85.3	80.2	82.4	85.1	55.3	45.1	4.5	52.0	2.4	3.2	2.7	0.8	15.4	17.6	88.2	5.1	4.7
M100XWH	100"(16:9)	93.5	87.2	90.2	93.3	59.6	49.0	4.5	55.9	2.4	3.6	3.1	0.8	19.8	22.7	97.6	5.5	5.5
M100UWH	100"(16:9)	93.5	87.2	90.2	93.3	59.6	49.0	4.5	55.9	2.4	3.6	3.1	0.8	19.8	22.7	97.6	5.5	5.5
M100XWH-E24	100"(16:9)	93.5	87.2	90.2	93.3	79.1	49.0	24.0	75.5	2.4	3.6	3.1	0.8	19.8	22.7	97.6	5.5	5.5
M106UWH	106"(16:9)	98.7	92.4	95.4	98.5	62.5	52.0	4.5	58.9	2.4	3.6	3.1	0.8	20.7	24.9	102.8	5.5	5.5
M106UWH-E24	106"(16:9)	98.7	92.4	95.4	98.5	82.0	52.0	24.0	78.4	2.4	3.6	3.1	0.8	20.7	24.9	102.8	5.5	5.5
M120XWH2	120"(16:9)	110.9	104.6	107.6	110.7	69.4	58.8	4.5	65.7	2.4	3.6	3.1	0.8	22.9	27.1	115	5.5	5.5
M120UWH2	120"(16:9)	110.9	104.6	107.6	110.7	69.4	58.8	4.5	65.7	2.4	3.6	3.1	0.8	22.9	27.1	115	5.5	5.5
M120XWH2-E24	120"(16:9)	110.9	104.6	107.6	110.7	88.9	58.8	24.0	85.3	2.4	3.6	3.1	0.8	22.9	27.1	115	5.5	5.5
M135XWH2	135"(16:9)	123.9	117.7	120.7	123.8	77.2	66.2	4.5	73.1	2.4	4.1	3.5	0.8	31.1	37.7	128	6.3	5.9
M135UWH2	135"(16:9)	123.9	117.7	120.7	123.8	77.2	66.2	4.5	73.1	2.4	4.1	3.5	0.8	31.1	37.7	128	6.3	5.9
M150XWH2	150"(16:9)	137.2	130.7	133.7	137.0	84.6	73.5	4.5	80.5	2.4	4.1	3.5	0.8	35.9	42.3	140.9	6.3	5.9
M150UWH2	150"(16:9)	137.2	130.7	133.7	137.0	84.6	73.5	4.5	80.5	2.4	4.1	3.5	0.8	35.9	42.3	140.9	6.3	5.9
M86UWX	86"(16:10)	79.3	72.9	75.9	79.1	55.7	45.6	4.5	52.5	2.4	3.2	2.7	0.8	13.7	16.5	81.9	5.1	4.3
M94UWX	94"(16:10)	85.3	79.7	82.7	85.1	60.0	49.8	4.5	56.7	2.4	3.2	2.7	0.8	15.7	18.5	88.2	5.1	4.3
M109UWX	109"(16:10)	98.7	92.4	95.4	98.5	68.3	57.8	4.0	64.2	2.4	3.6	3.1	0.8	20.3	24.7	102.8	5.5	5.5
M128UWX	128"(16:10)	114.8	108.5	111.5	114.7	78.4	67.8	4.5	74.8	2.4	3.6	3.1	0.8	28.9	34.4	119.3	6.3	5.9
M139UWX	139"(16:10)	123.9	117.9	120.9	123.8	84.2	73.7	4.5	80.6	2.4	3.6	3.1	0.8	33.3	38.8	128	6.3	5.9
M95UWC-E18	95"(2.35:1)	93.5	87.2	90.2	93.3	61.3	37.2	18.0	57.6	2.4	3.6	3.1	0.8	17.9	21.9	97.6	5.5	5.5
M114UWC-E18	114"(2.35:1)	110.9	104.6	107.6	110.7	68.7	44.6	18.0	65.1	2.4	3.6	3.1	0.8	21.7	25.4	115	5.5	5.5
M128UWC-E20	128"(2.35:1)	123.9	117.7	120.7	123.8	76.7	50.1	20.0	72.6	2.4	4.1	3.5	0.8	29.3	35.9	127.8	6.3	6.3
M142UWC-E19	142"(2.35:1)	137.2	130.7	133.7	137.0	81.2	55.6	19.0	77.0	2.4	4.1	3.5	0.8	35.9	42.3	140.9	6.3	5.9

Note: Data Error may be ±1"
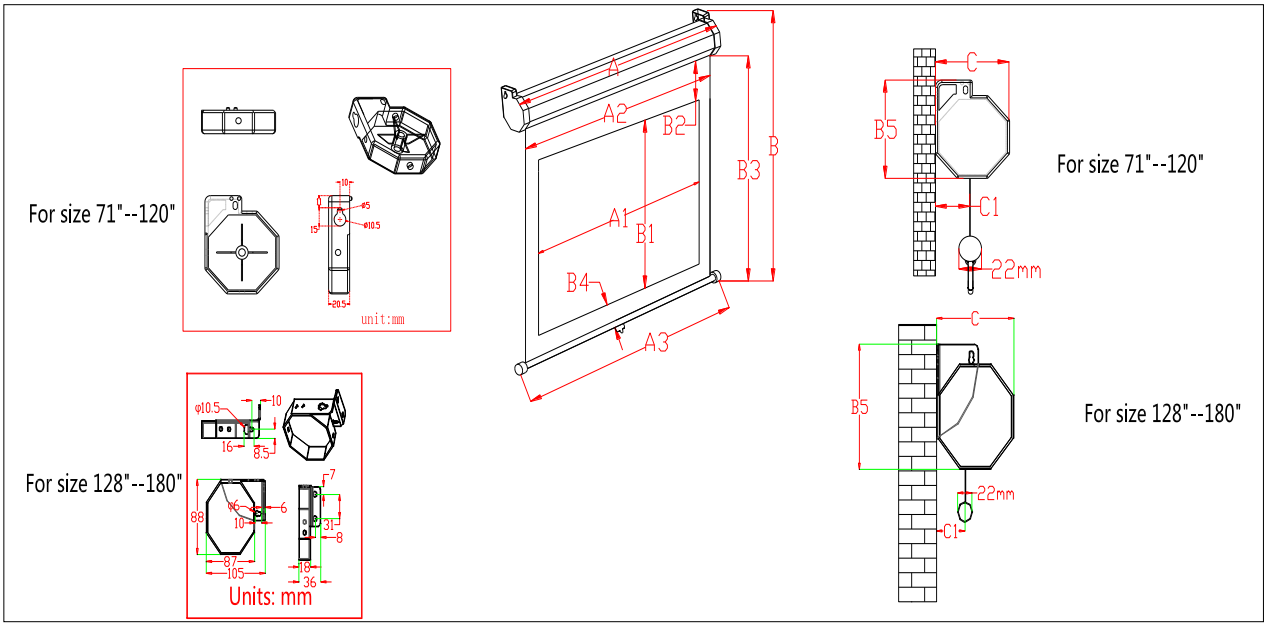
The listed measurements are for general reference only. Please contact Elite Screens to verify product design and dimensions before attempting to integrate its products with any structural or furniture modification. Although a manufacturer may offer product advice, it may be taken or disregarded at the integrator's discretion. Elite Screens will not be held responsible or be otherwise liable for faulty installations.